AFC INDUSTRIES
13-16 133 PLACE
COLLEGE POINT, NY 11356
TEL: (718)747-0237
FAX: (718)747-0726

THE PLANS AND DRAWINGS CONTAINED HEREIN ARE PROPRIETARY AND MAY NOT BE COPIED OR REPRODUCED MECHANICALY, ELECTRONICALY OR BY ANY MEANS WITHOUT WRITTEN PERMISSION FROM AFC INDUSTRIES, INC.

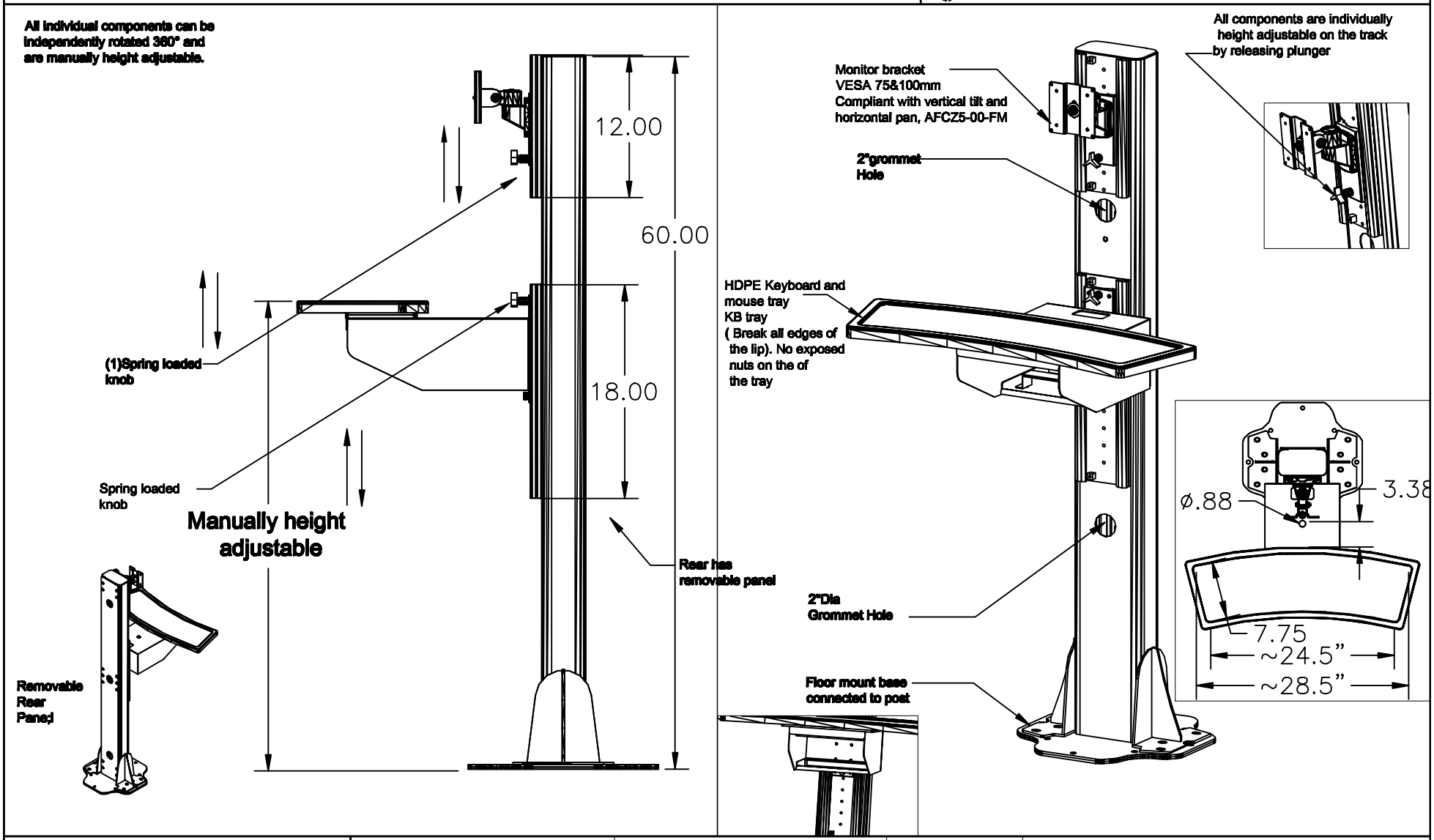

NOTES :	MATERIAL : AS NOTED ABOVE	DRAWN BY : VGM	DATE: 11/25/11	DESCRIPTION : FLOOR POST-100 series
	TOLERANCES UNLESS OTHERWISE SPECIFIED 2 PLC. DEC. ±.50	A P P R O V E D		SKU NUMBER : 772325
		ENG :		PATH : F.ASSY/C&R/FLOOR POST-100 series
		MFG :		
		QA :		
		SCALE : N.T.S.	SHEET : 1 OF 2	PDF NAME: FP100-1F-1KB-1SH-001 REV: 7